CONTEMPORARY COLLECTION

Blade

CRISTINA

CRIBA227

Blade embodies a perfect fusion of aesthetics and cutting-edge engineering. Its design is defined by sharp, precise lines that sculpt its form, giving it a sophisticated and distinctive look. These elements are not merely decorative but contribute to a seamless integration between spout and body, reflecting light with crystal-clear precision and creating a modern aesthetic. The lever, strategically positioned above the faucet body, resembles a thin blade and is the result of advanced technological development that emphasizes and completes the artistic vision of the design. With a Ø25 cartridge for countertop models and an aerator limiting flow to 5.62 liters per minute, Blade stands out for its water efficiency and adaptability to various settings, making it ideal for contemporary spaces where style meets sustainability. Available finishes include: chrome, matte black, alux, brushed rose gold PVD, glossy and brushed black chrome, brushed metallic, and brushed gold brass PVD.

Before ordering items requiring certifications on particular markets, please check with your sales contact

Technical description

Medium single-control deck-mounted single-hole washbasin mixer, with mechanical mixing, 1 1/4" Up&Down* drain

COMMAND
Single-control

INSTALLATION
Deck-mounted

TYPOLOGY
Mixer

ENVIRONMENT
Bathroom

FLOW RATE
5,6 l/min

FINISHES

- 13 - Black Matt
- 34P - Brushed Copper Pvd
- 56P - PVD Polished Gold Brass
- 75 - Brushed Black Chrome
- 96P - Brushed Gold Pvd
- 15 - Alux
- 51 - Chrome
- 72 - Polished Black Chrome
- 77 - Brushed Metallic

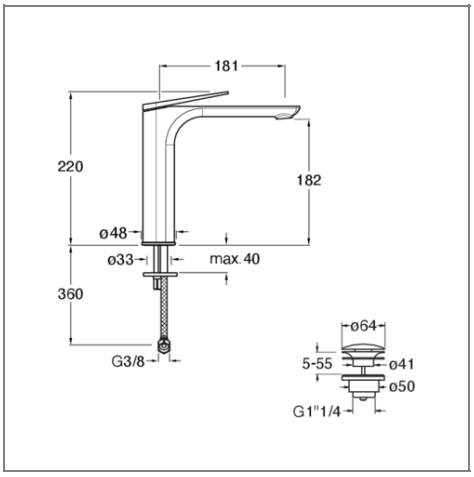

CRISTINA S.r.l. Via Fava, 56 28024 Gozzano (NO) Italy
Tel. +39.0322.9545 | Fax +39.0322.956556 | info@cristinagroup.com
C.F e P.Iva. 00309260032 | Capitale Sociale 1.000.000 I.V. | Registro Imprese 00309260032 | Rea NO117362